SE-5-kit Power plant

Tools and Supplies

The following tools should be kept at the ready for assembly of this set (not included): Allen key SW 1,5, Needle-tip tweezers, Allen key SW 2,5, Torx keys 6, 8 , 10, 20.
You will also require additional color paint and glue.
Included in the set for kits, you will find: 1 ceramic paste syringe(very hard, cut with side cutter),1 holder aid plate for aligning pin(63), 1 drive punch for releasing the aligning pin(5),1x fluid oil 12(62), 1 x glue Super Glue instant adhesive(60).

Assembly (front = chimney on the right)

1 - Carefully insert a bearing (13) manually into both sides of the rocker arm (34). Take the rocker arm axis (33) and push a locking washer (29) on the short side with the puncture. Lead the rocker arm axis (33) into the rocker arm (34) through the side of the aluminum case, so that the long end of the rocker arm axis (34) protrudes from the rear. Fasten the rocker arm axis (33) to the rocker arm (34) with another locking washer (29). Here you should observe the fact that the rocker arm (34) may not be attached tightly onto the rocker arm axis (33) between both locking washers (30). Some play should remain. **(see Figure 1)**
2 - Press in the displacement piston cover (24) into the displacement piston (23) then screw into the displacement axis (22) with lacquer / glue on the thread. **Carefully** wipe off any overflowing glue with a cloth and let it dry. **(see Figure 2)**
3 - Insert the sleeve (46) into chamber 1 (35), so that the sleeve (46) cannot fall out.> **(see Figure 3)**
4 - Insert the assembled displacement piston (23) into chamber 1 (35). If chamber 1 (35) is held vertically, the displacement piston (23) should fall in by itself - it should not jam. **(see Figure 4)**
5 - Place the heating cylinder (44) in the middle of chamber 1 (35) and attach with screws (9) 4x. **(see Figure 5)**
6 - Connect the shorter connecting rod (27) with the crankshaft (26) using the aligning pin (11), the holding plate (63) and needle-tip tweezers, then connect to the displacement axle (22) of chamber 1 (35).
PLEASE BE CAREFUL: Do not damage the slip surface of the displacement axle (22)! **(see Figure 6)**
7 - Insert the piston guide (45) into the large hole of chamber 1 (35) so that the small outer drill hole of the piston guide (45) points in the direction of the heating cylinder (44).
Plug the chamber ring 1 (38) onto chamber 1 (35) and screw onto the upper drill hole of chamber ring 1 (38) with a screw (6) 1x in order to properly center and fixate the piston guide (45) into chamber 1 (35).
Then screw in the other screws (4) 8x into chamber 1 (35). **(see Figure 7)**
8 - Finally, plug chamber ring 2 (39) onto chamber 1 (35) after having driven the crankshaft (26) through.
Then, connect chamber 1 (35) and chamber 2 (36) and attach with screws (9) 2x. Take care not to damage the crankshaft (26) and that the sleeve (46) is located in chamber 1 (35). **(see Figure 8)**
9 - Drive second chamber ring 2 (39) over the crankshaft (26). Take chamber 3 (37) with the large slot pointing down over the crankshaft (26) and plug chamber ring 2 (39) onto it.
It is important that you make sure the sunken side of the two connecting rods (27/28) of the crankshaft (26) points forward.
Now, connect chamber 2 (36) and chamber 3 (37) using the using screws (9) 2x. **(see Figure 9)**
10 - Lightly screw on the rocker arm plates (58/59) on the right and left onto chamber 2 (36) with screws (4) 4x and make sure the flame is correctly positioned.
Screw the assembled rocker arm (34) between both rocker arm plates (58/59) using screws (4) 2x. It should be ensured that both rocker arms (34) point upward.
Then, tighten all 6 screws (4). **(see Figure 10)**
11 - Connect the short connecting rod (25) and the working piston (21) using the aligning pin (11). Use part (63) as aid.
WARNING: The wall thickness of the working piston (21) is very thin, therefore do not use tweezers - one drill hole is usually smoother than the other! **(see Figure 11)**
12 - Drive the previously assembled working piston (21) into the piston guide (45). It is **important** that the sunken side of the connecting rod (25) points forward.
Attach the working piston (21) and attached connecting rod (25) with the rocker arm (34). Push a black bearing bush (10) into the connecting rod (25) from behind and screw in from the front using a screw (8). Only tighten very lightly using a 3 cNm torque, since excess torque will crush the black bearing bush (10), leading to braking and blockage! **(see Figure 12)**
13 - Insert bearings (12) 6x into chamber 1 (35), chamber 2 (36) and chamber 3 (37). Make sure that the bearings (12) do not fall out.
Assemble both locking washers (29) with both belt pulley axes (30).
The first assembled belt pulley axle (30) goes into the bearing (12) on chamber 1 (35) from behind.
The belt pulley wheel (41) is assembled onto the belt pulley axle (30) that points outward to the front using a screw (3). There should be a spacing of 0.2mm between the front bearing (12) and the belt pulley wheel 1 (41) (this corresponds to 2 sheets of paper).
The second assembled belt pulley axle (30) is inserted into the bearing (12) on chamber 2 (36) from the rear.
Belt pulley wheel 2 (42) is assembled onto the belt pulley axle (30) that points outward to the front using a screw (3). There should be a spacing of 0.2mm between the front bearing (12) and belt pulley wheel 2 (42). **(see Figure 13)**
14 – Then, the axle (31) goes through the ball bearing (12) at the front of chamber 3 (37) and the first cam of the crankshaft (26) and is screwed so that the axle (31) does not overlap further over the cam of crankshaft (26).
Then, the axle (32) goes through the ball bearing (12) at the rear of chamber 3 (37) and the second cam of the crankshaft (26) and is screwed so that the axle (32) does not overlap further over the cam.
Attach the connecting rod (28) with the rocker arm (34). Push a black bearing bush (10) into the connecting rod (28) from behind and screw in from the front using a screw (8). Only tighten very lightly using a 3 cNm torque, since excess torque will crush the black bearing bush (10), leading to braking and blockage!
The chamber ring 3 (40) is plugged onto chamber 3 (37) and screwed on with screws (4) 8x. **(see Figure 14)**
15 - Take the left side frame (56), hex bolt (1) 2x, pan head screw (2) 2x and screw it together. Make sure that the threaded hole of the hex bolts (1) are pointed downwards in order to be able to screw it to the wooden board (14) later. Then, screw the right side frame (57) to the pan head screw (2) 2x.
The assembled chamber is screwed to the assembled side frames using screws (4) 4x.
The wooden board (14) is then bonded to the rubber feet (65) 3x at the bottom and is screwed to the assembled chamber and the side frames from below. It is **important** that the recess of the wooden board (14) is located under the heating cylinder (44). To do so, you need the countersunk screw (18) 2x and the washer (19) 2x.
(see Figure 15)
16 - Push the spacer sleeve (20) on the rear of the axle (32) followed by the flywheel (47) and secure them with a screw (3). It is important that you attach the flywheel (47) flush with the axle (32).
Plug the belt pulley 3 (43) on the axle (31) and screw it in with the screw (3), taking care that the space between the ball bearing (12) and the belt pulley 3 (46) is 0.2mm. **(see Figure 16)**
Pull the O-belt (16) over belt pulley 3 (43) and belt pulley 2 (42) around the rear groove.
Now the O-belt (15) goes into the rear groove of belt pulley 1 (41) and in the front groove of belt pulley 2 (42). **(see Figure 17)**
18 - The pipe holder (48) is attached to the front of chamber 3 (37) using screws (7) 2x.
Pipe coil 1 (52) is plugged over pipe bush 1 (49) us. Subsequently, place a drop of instant adhesive 2 (60) in the inner heel of pipe bush 2 (50) which is then placed on pipe bush 1 (49). **Carefully wipe off** any overflowing glue with a cloth and **let it dry**.
The pipe coil 2 (53) goes onto pipe bush 2 (50), which are then glued to the inner heels of pipe bush 3 (51) using 1 drop of glue. Here, also only use one drop. **Carefully wipe off** any overflowing glue with a cloth and **let it dry.**
Next, 1 drop of instant adhesive (60) is placed in the inner heel of pipe coil 3 (51), onto which the pipe crown (54) is then placed. **Carefully wipe off** any overflowing glue with a cloth and **let it dry**.
Place the glued pipe in the pipe holder (48) and screw in with a screw (4).
Pull off the lid of the ethyl alcohol burner (55) with sufficient force, insert a wick, then replace the lid. Enlarge the wick by approx. 3mm. The ethyl alcohol burner (55) is then inserted into the recess of the wooden board (14) **(see Figure 18)**
19 - **Perform the first test run WITHOUT lubricant**, then rub off a **minimal** amount of white ceramic paste between your thumb and index finger until almost no paste is visible. Now place a thin film on the working piston (21) using your index finger. Insert the working

piston (21) into the piston guide (45) and move back and forth. First, release the working piston (21) from the crankshaft (26). The working piston (21) may not scratch or jam! Oil should not enter the working piston (21) under any circumstance! Place 1 small droplet of oil (Ø1mm) from the provided syringe onto the displacement axle (22) and onto the crankshaft axle (26) (**after 1st test run**).
20 - **PLEASE NOTE**: A small impact of the flywheel (47) is normal and inevitable in this assembly (it is no grounds for a warranty claim!).
21 - Never unscrew the grub screws of the crankshaft (26)! The crankshaft (26) can only be aligned using special equipments from the manufacturer!
22 - **PLEASE NOTE**: A small impact of the flywheel (47) is normal and inevitable in this assembly (it is no grounds for a warranty claim!).
23 - Use the supplied O-belt (64) to drive the Ferris wheel or the windmill, for example. You can use the graduated belt pulleys (41/43) to reach various speeds.

Put the motor into operation.

CAUTION: The motor must be operated under the supervision of persons over 18 years of age.
Flammable objects must not be located in the vicinity of the motor itself. Do not touch the motor, as this can cause burns.
Use caution when dealing with methylated spirits. Never leave bottles of ethyl alcohol open.
Improper handling of the Stirling motor can cause fires!

Operating instructions

1 - Set up the motor in a draft-free area.
2 - Remove the alcohol burner (55) and fill with 94% ethyl alcohol up to the lower mark.
CAUTION: The ethyl alcohol can damage the paint. Always close the ethyl alcohol bottle and put it away.
3 - Light the wick.
4 - **Preheat for approx. 30 seconds.**
5 - Turn flywheel energetically until the motor runs by itself.
• Never let the motor run unattended.

Care

The engine should be stored in a dust-free area. Even the smallest amount of dirt can cause the motor to stop. The fittings are in the H7 area. All mechanical moving parts must move freely, otherwise the engine will not run! Be careful when cutting - many parts have walls less than 0.25 mm thick.

What is to do when the engine is not running

• Check whether all mechanical components can be freely moved.
• Are the black bushings too tight?
• Has too much paste been was applied?
• Has oil gotten on the working piston (21)? (Possible after long operating times) Please dry the piston with a cloth, as well as the cylinder inside.

For technical advice, please contact:
E-mail: rarecreationsnz@gmail.com

The working principle of the Stirling motor

The burner heats the air, which is located in a closed circuit. Due to the thermal expansion, the piston and the flywheels are put in motion. As the piston moves toward the flywheels, the displacement piston is pushed into the heating cylinder by the cooling fins. Since the displacement piston has no seal, the hot air moves past the outer wall in which the cylinder unit cooled by the cooling fins moves. Since the temperature here is about 300° C lower (volume reduction), the cooled air provides a vacuum that pulls in the piston and keeps the flywheels in motion. The displacement piston is drawn back into the cooling fins by the rotary motion, whereby the air cooled in this room flows rapidly into the heating cylinder. It heats up again, expands and continues to work.

SE-5-kit Power Plant

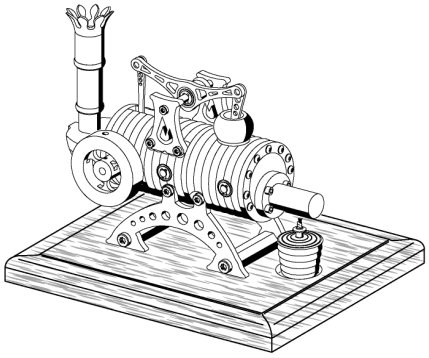

1

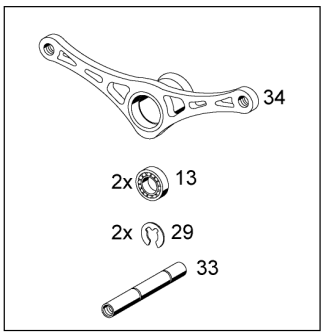

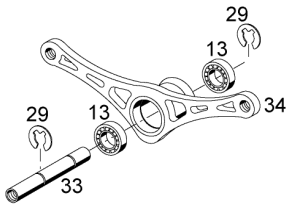

2

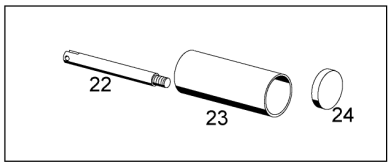

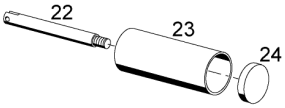

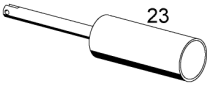

3

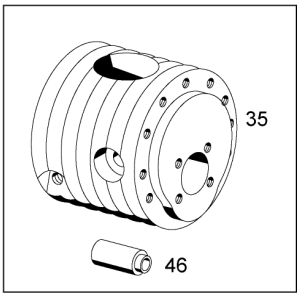

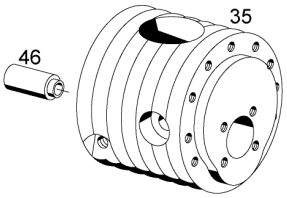

4

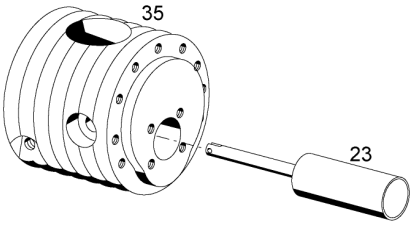

5

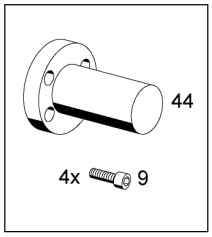

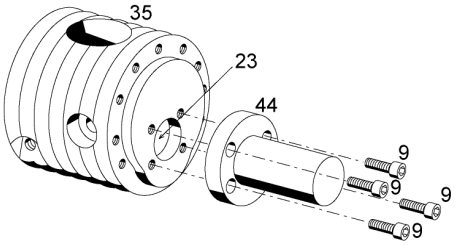

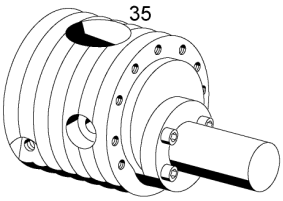

6

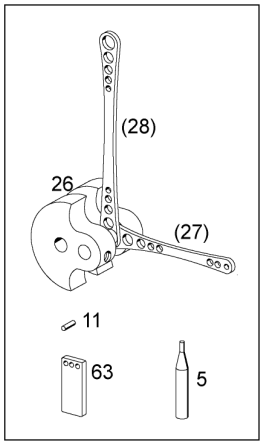
(28)
26
(27)
11
63
5

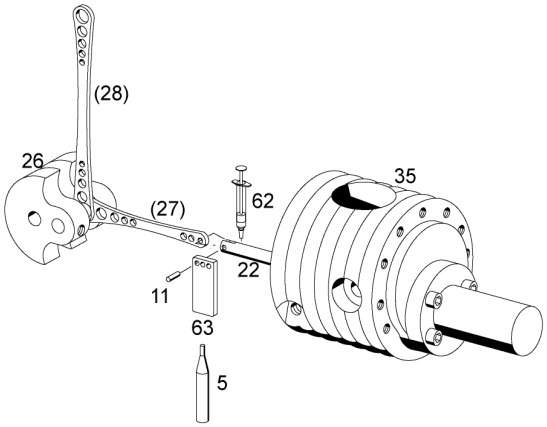
(28)
26
(27)
62
35
22
11
63
5

7

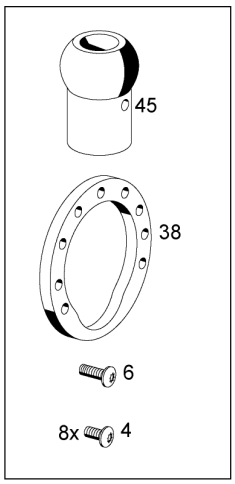
45
38
6
8x 4

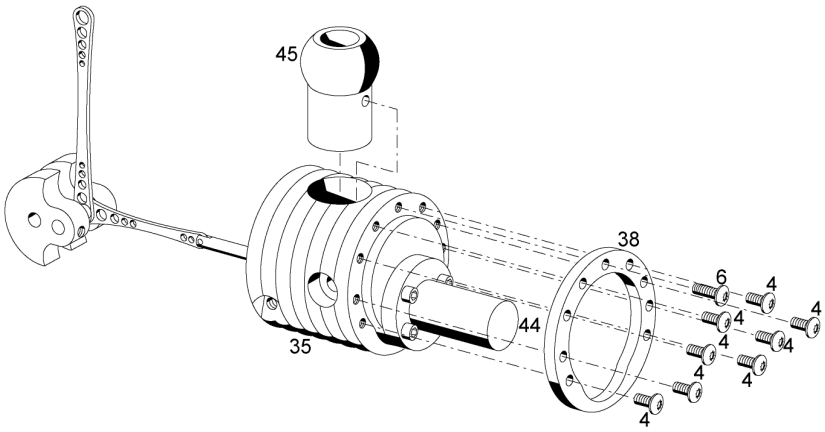
45
38
6
4
4
4
4
4
4
4
4
4
44
35

8

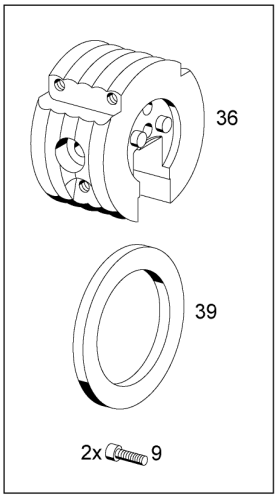
36
39
2x 9

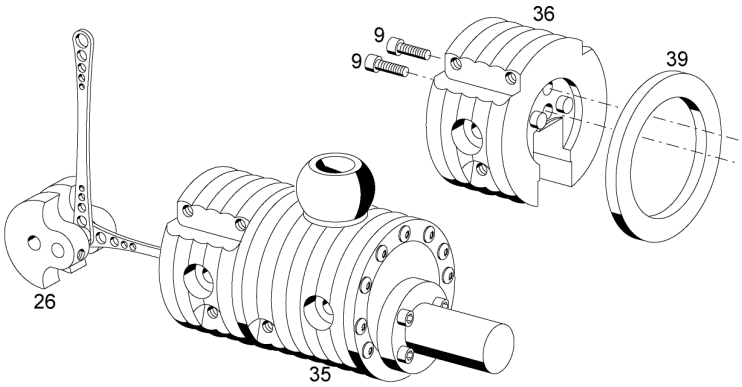
9
9
36
39
26
35

9

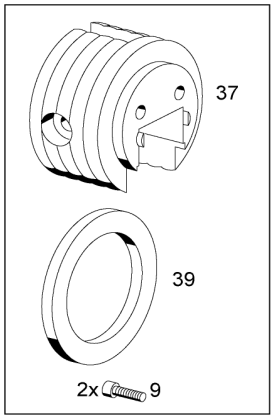
37
39
2x 9

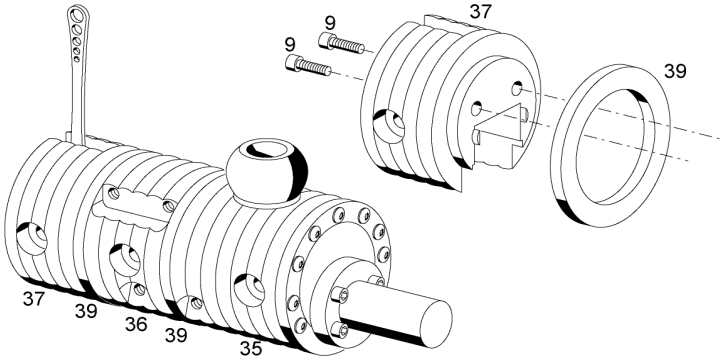
9
9
37
39
37
39
36
39
35

10

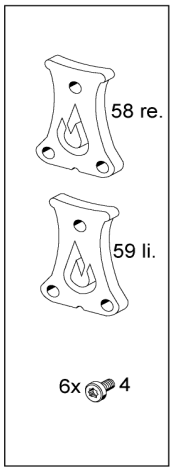
58 re.
59 li.
6x 4

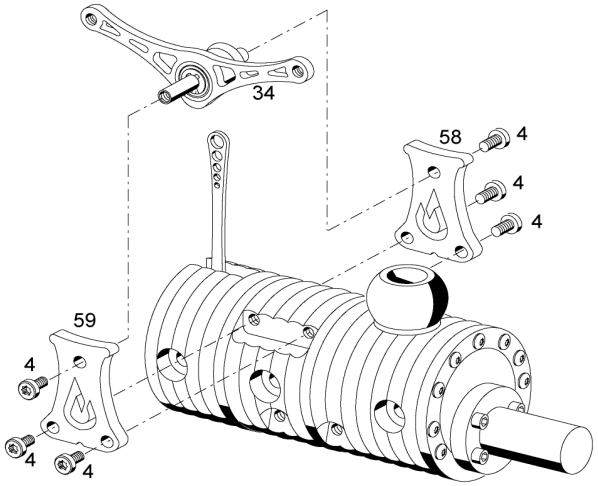
34
58
4
4
4
59
4
4
4

11

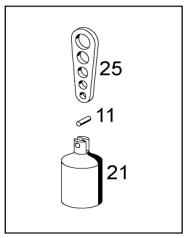
25
11
21

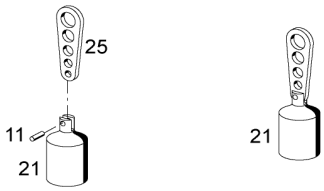
25
11
21
21

12

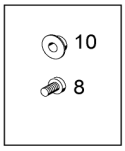
10
8

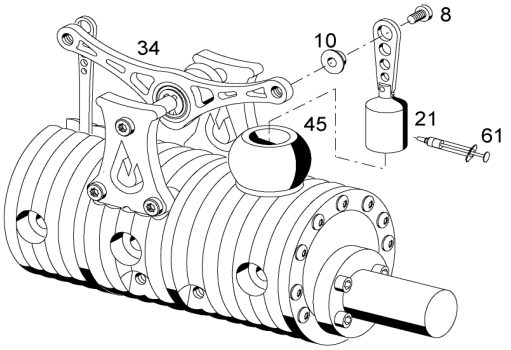
34
10
8
45
21
61

13

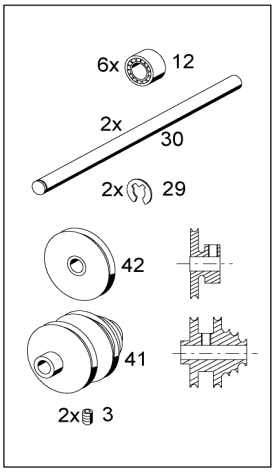
6x
12
2x
30
2x
29
42
41
2x
3

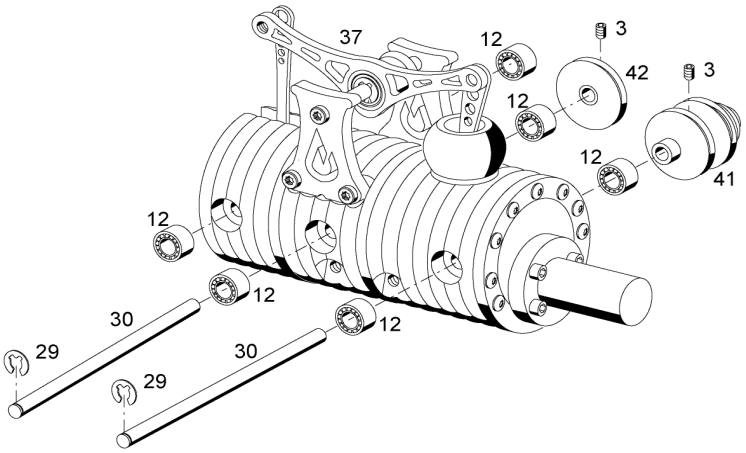
37
12
3
42
3
12
12
41
12
12
30
12
29
30
29

14

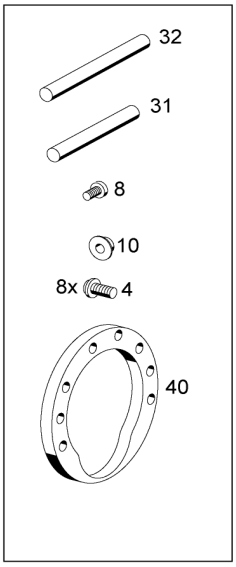
32
31
8
10
8x
4
40

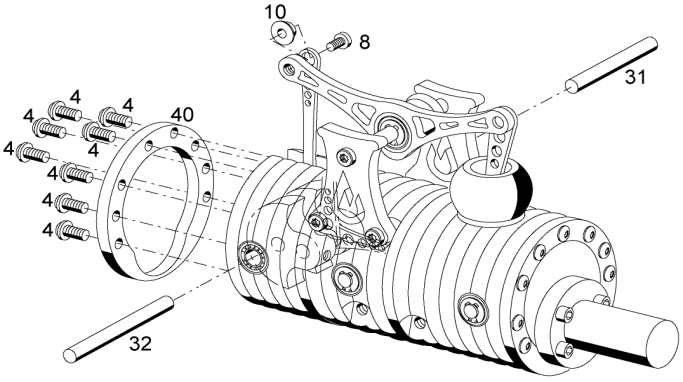
10
8
31
4
4
4
40
4
4
4
4
4
4
32

15

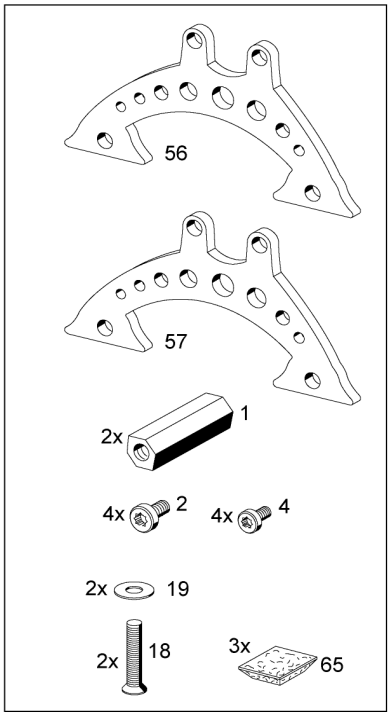
56
57
2x 1
4x 2
4x 4
2x 19
2x 18
3x 65

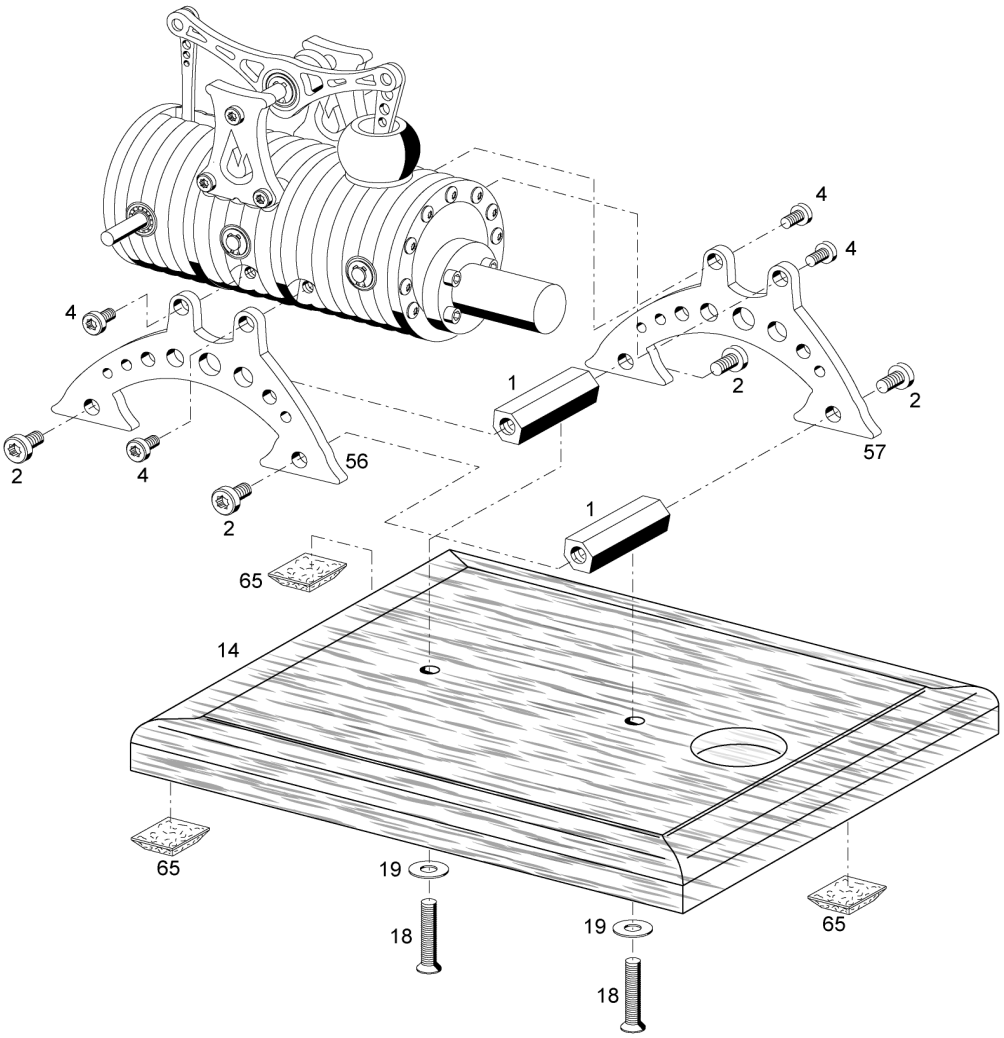
4
4
4
1
2
2
2
4
2
56
57
1
65
14
65
19
18
19
18
65

16

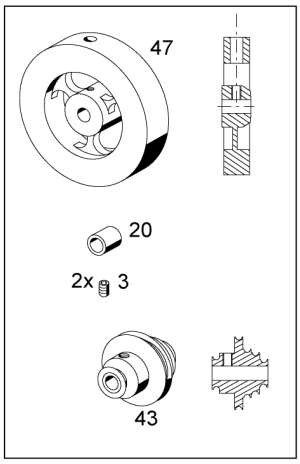
47
20
2x 3
43

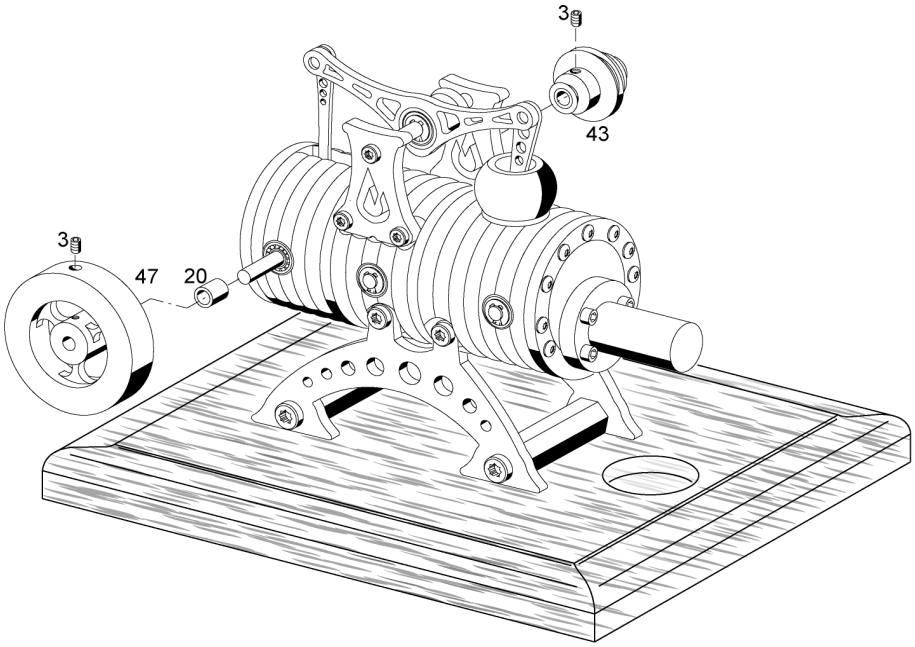
3
43
3
47
20

17

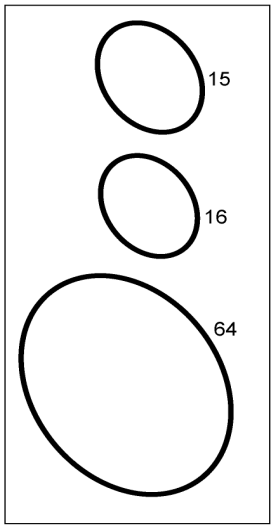
15
16
64

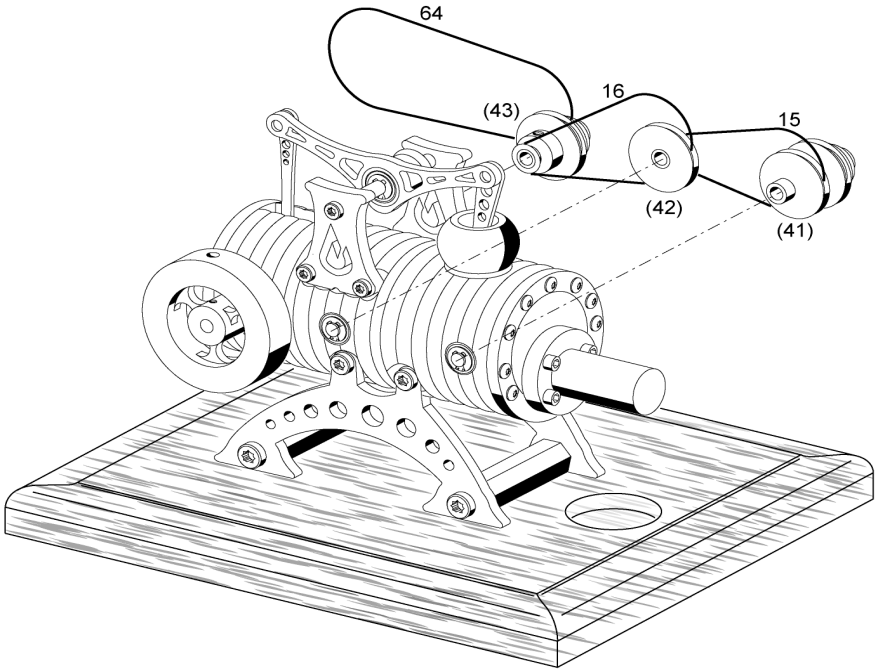
64
16
(43)
15
(42)
(41)

18

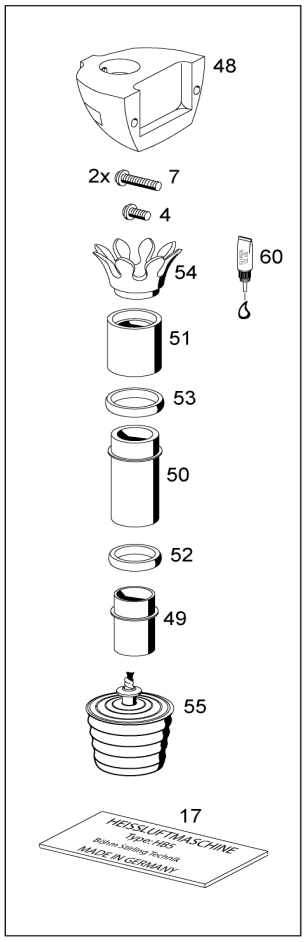
48
2x
7
4
54
60
51
53
50
52
49
55
17
HEISSLUFTMASCHINE
Type:HB5
Böhm Stirling Technik
MADE IN GERMANY

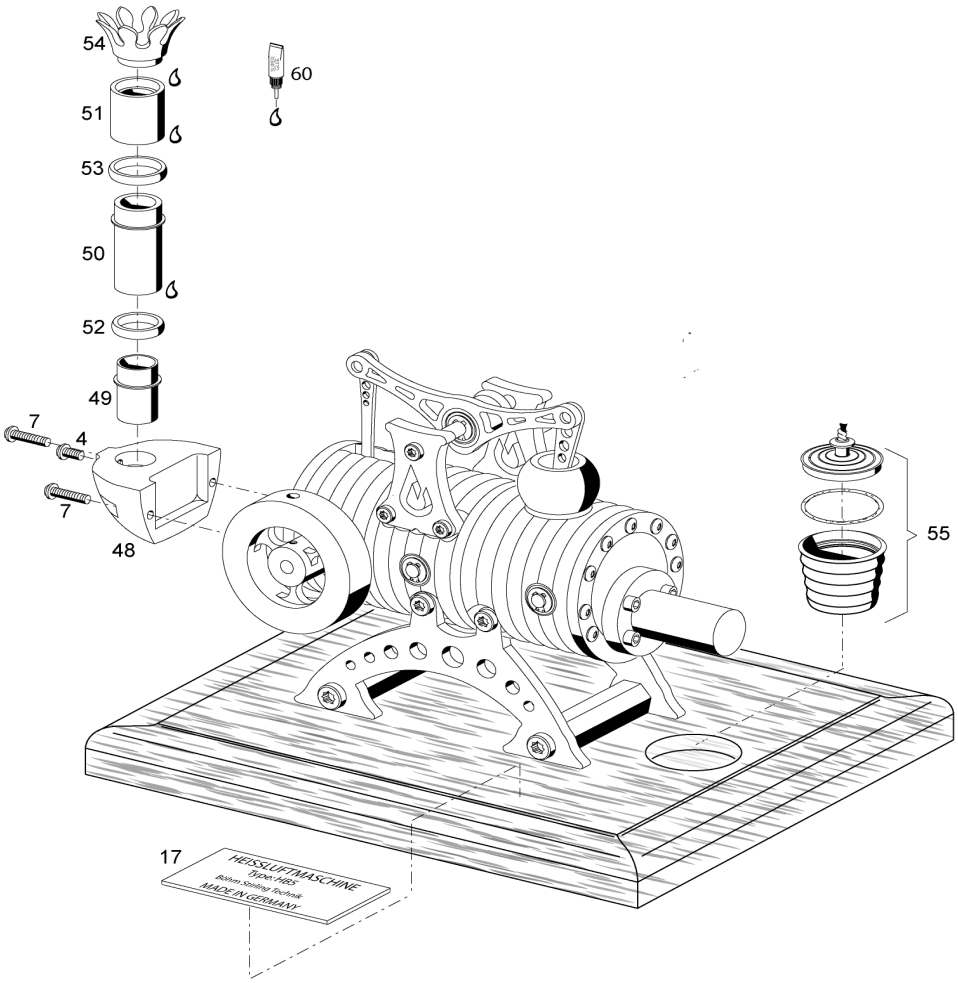
54
60
51
53
50
52
49
7
4
7
48
55
17
HEISSLUFTMASCHINE
Type:HB5
Böhm Stirling Technik
MADE IN GERMANY

Bild/Nr. Ill. No.	Bennenung Part No.	Abm. Bemerkung Diment. Remarks	Stück Pieces	Denomination
1	Sechskantbolzen	SW8x25mm	2	Hex distanz piece
2	Linsenkopfschraube	M4x6mm TX20	4	Head screw
3	Madenschraube	M3x3mm SW1,5	4	Crub screw
4	Linsenkopfschraube	M3x6mm TX10	27	Haed screw
5	Durchschlag für lösen des Passstift		1	Drive punch
6	Linsenkopfschraube	M3x8mm TX10	1	Head screw
7	Linsenkopfschraube	M3x12mm TX10	2	Head screw
8	Linsenkopfschraube	M2,5x4mm TX8	2	Head screw
9	Inbusschraube	M3x8mm SW2,5	8	Sockethead screw
10	Schwarze Plastikbüchse		2	Black plastic bush
11	Passstift	Ø1,5x4mm	2	Pin
12	Kugellager	Ø9x4mm	6	Ball bearing
13	Kugellager	Ø9x2,5mm	2	Ball bearing
14	Holzbrett HB5		1	Beech base
15	O-Riemen Antrieb	Ø32x1,5mm	2	Belt drive
16	O-Riemen Antrieb	Ø29x1,5mm	2	Belt drive
17	Typenschild HB5		1	Type plate
18	Senkschraube	M4x20mm TX20	2	Counter-sunk screw
19	Scheibe	Ø12x1,5mm	2	Washer
20	Distanzbüchse	Ø6x5mm	1	Spacer
21	Arbeitskolben	Ø11,5x18,3mm	1	Working piston
22	Verdrängerachse	Ø4x33mm	1	Displace axle
23	Verdrängerkolben	Ø12x27,6mm	1	Displace piston
24	Verdrängerkolben Deckel	Ø11,6x1,5mm	1	Displace piston cover
25	Pleuel kurz	22mm	1	Connecting rod short
26	Kurbelwelle montiert		1	Crank shaft ass.
27	Pleuel mit Kurbelwelle	39,5mm	1	Connecting rod with Crank shaft
28	Pleuel mit Kurbelwelle	62mm	1	Connecting rod with Crank shaft
29	Sicherungsscheibe	3,2mm	4	Look washer
30	Achse für Riemenrad 1+2	Ø4x54,7mm	2	Axle for belt pully
31	Achse für Riemenrad 3	Ø4x27,3mm	1	Axle for belt pully
32	Achse für Schwungrad	Ø4x33,1mm	1	Axle for Flywheel
33	Kipphebelachse mit 2 Einstichen	Ø4x25mm	1	Rocker shaft
34	Kipphebel		1	Rocker arm
35	Kessel 1 für Heizzylinder		1	Boiler 1 for heating cylinder
36	Kessel 2 für Kipphebel		1	Boiler 2 for rocker arm
37	Kessel 3 für Kurbelwelle		1	Boiler 3 for crank
38	Kesselring 1 für Kessel 1		1	Boiler ring 1
39	Kesselring 2 für Kessel 1+3		2	Boiler ring 2
40	Kesselring 3 für Kessel 3		1	Boiler ring 3
41	Treibrad 1 für Kessel 1	Ø20,7x17,2mm	1	Belt pully 1
42	Riemenrad 2 für Kessel 2	Ø20,2x8,2mm	1	Belt pully 2
43	Treibrad 3 für Kessel 3	Ø20,7x15,4mm	1	Belt pully 3
44	Heizzylinder	Ø25x28mm	1	Heating cylinder
45	Kolbenführung	Ø23,6x28,5mm	1	Piston guide
46	Hülse für Verdrängerachse	Ø8x16,3mm	1	Bush
47	Schwungrad	Ø40x8mm	1	Flywheel
48	Schlothalter		1	Pipe holder
49	Schlothülse 1	Ø16x20,4mm	1	Pipe bush 1
50	Schlothülse 2	Ø18x31mm	1	Pipe bush 2
51	Schlothülse 3	Ø18x18mm	1	Pipe bush 3
52	Schlotring 1	Ø17,5x3mm	1	Pipe coil 1
53	Schlotring 2	Ø19,5x3mm	1	Pipe coil 2
54	Schlotkrone		1	Pipe crown
55	Spiritus-Brenner	Ø30x35mm	1	Burner case with wick
56	Seitenteil vorne		1	Side frame front
57	Seitenteil hinten		1	Side frame rear
58	Kipphebelplatte rechts		1	Rocker arm plate right
59	Kipphebelplatte links		1	Rocker arm plate left
60	Sekundenkleber SUPER GLUE		1	Ball bearing adhesive
61	Keramikpaste weiss		1	White ceramic grease
62	Öl für Verdrängerachse		1	Oil
63	Montagehilfe für Passstift		1	Holder plate
64	O-Riemen Antrieb	Ø110x1,5mm	2	Belt drive
65	Gummifüße		3	Rubber foot

RARE CREATIONS
MAPUA
NZ